USN | | | | | | | | | | [23ESEE12]

FIRST SEMESTER B.Tech EXAMINATION, JANUARY - 2024
BASICS OF ELECTRICAL AND ELECTRONICS ENGINEERING

Time: 3 Hours **Maximum Marks: 100**

Instructions: i. Missing data may be suitably assumed.

ANSWER ALL QUESTIONS

		PART-A	**05 X 02=10**		
1.	**a**	State ohms law.	L-1	CO1	**02**
	b	Define form factor and crest factor.	L-1	CO2	**02**
	c	Write short notes on MCB.	L-1	CO3	**02**
	d	What is the value of a resistor which has first three color bands as Red, black, and Orange?	L-2	CO4	**02**
	e	Draw the V-I characteristics of PN junction diode.	L-2	CO5	**02**
		PART-B	**06 X 05=30**		
2.	**a**	Prove that the equivalent resistance of a group of resistors connected in parallel is the reciprocal of the sum of the reciprocal of each resistance.	L-3	CO1	**05**
		OR			
	b	With the help of a suitable circuit diagram prove that the reciprocal of the equivalent resistance of a group of resistances joined in series is equal to the sum of the reciprocals of the individual resistances.	L-3	CO1	**05**
3.	**a**	A series circuit has R=5Ω , L=0.15mH and C=100μF supplied with 230V,50Hz single phase ac supply. Find impedance, current, power, power factor of the circuit.	L-3	CO2	**05**
		OR			
	b	A series has R=100Ω , C=50μF and is supplied with 250V,50Hz single phase ac supply. Find Capacitive reactance, Impedance, current and phase angle of the circuit.	L-3	CO2	**05**
4.	**a**	Draw the switching table of a two way and three way connection switch with neat diagram.	L-3	CO3	**05**
		OR			
	b	Define earthing and explain the different types of earthing in electrical installation.	L-2	CO3	**05**
5.	**a**	Explain the different types of Resistors with neat diagram.	L-2	CO4	**05**
		OR			
	b	Classify the various fuse unit used in electrical installation.	L-2	CO4	**05**
6.	**a**	Explain the working of a voltage regulator with neat diagram.	L-2	CO5	**05**
		OR			
	b	Explain the working of a Full wave rectifier with capacitor filter with neat diagram.	L-2	CO5	**05**
7.	**a**	Derive an expression for the current and impedance for a series RLC circuit excited by a Sinusoidally alternating voltage.	L-2	CO2	**05**
		OR			

	b	Classify the different types of cables in electrical circuits.	L-2	CO3	**05**
		PART-C	**06 X 10=60**		
8.	**a**	Explain detail about Kirchhoff's Current and Voltage law with suitable examples.	L-2	CO1	**10**
		OR			
	b	Derive voltage divider and current divider technique to compute voltage and current.	L-2	CO1	**10**
9.	**a**	Derive an expression for the current and impedance for a series RL circuit excited by a Sinusoidally alternating voltage. Draw the phasor diagrams.	L-2	CO2	**10**
		OR			
	b	Derive an expression for the current and impedance for a series RC circuit excited by a Sinusoidal alternating voltage. Draw the phasor diagrams.	L-2	CO2	**10**
10	**a**	Describe the various types of switches used in electrical circuits.	L-2	CO3	**10**
		OR			
	b	Explain the classification of battery and their characteristics.	L-2	CO3	**10**
11	**a**	With neat block diagram, explain detail about dc power supply.	L-2	CO4	**10**
		OR			
	b	Describe the block diagram of an electronic instrumentation system with neat sketch.	L-2	CO4	**10**
12	**a**	Explain the working of half wave rectifier with neat diagram.	L-2	CO5	**10**
		OR			
	b	Explain in detail the construction, principle of operation and VI characteristics of a PN junction diode.	L-2	CO5	**10**
13	**a**	If the value of each resistor is 8 ohms then calculate the equivalent resistance across the terminals a and b, 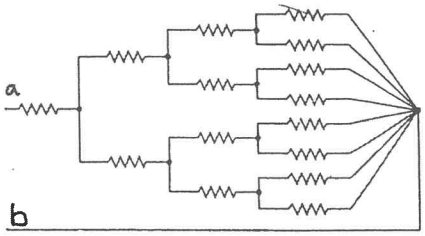	L-3	CO6	**10**
		OR			
	b	The equivalent resistance for the given circuit between the terminals A and B. 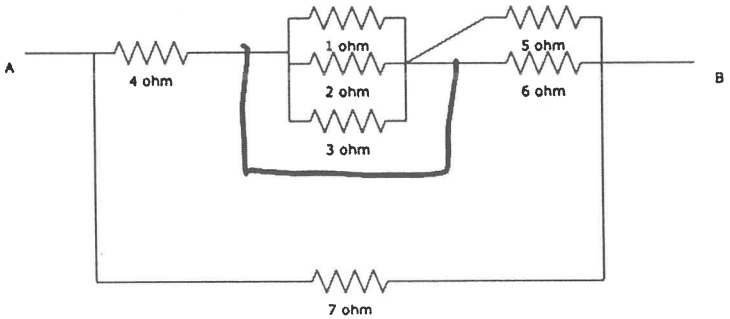	L-3	CO6	**10**